# MOTRIX

MOTORCYCLE PARTS AND ACCESSORIES

# NEW PRODUCTS RELEASE

# CARBURETOR REPAIR KITS

## 08110-130829

Carburetor repair kit for YAMAHA PW50 81-18

# GASKETS

| ITEM NO. | DESCRIPTION | PHOTO |
|---|---|---|
| 19-50121 | Complete set gasket for SUZUKI RM125 79-80 | |
| 19-80143AB-40 | Base gasket for KTM 125-150 TBI 2023. 0.40MM | 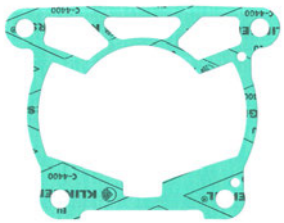 |
| 19-80143AB-50 | Base gasket for KTM 125-150 TBI 2023. 0.50MM | |
| 19-80743AB-25 | Base gasket for HUSQVARNA TC85 18 / KTM SX85 18. 0.25MM | 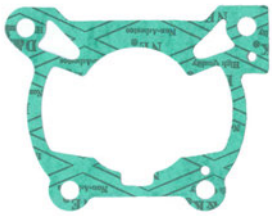 |
| 19-80743AB-30 | Base gasket for HUSQVARNA TC85 18 / KTM SX85 18. 0.30MM | |
| 19-80743AB-60 | Base gasket for HUSQVARNA TC85 18 / KTM SX85 18. 0.60MM | |
| 19-80743AB-80 | Base gasket for HUSQVARNA TC85 18 / KTM SX85 18. 0.80MM | |
| 195-T46K | Cam tensioner gasket for SUZUKI RMZ250 19-24 | |

# HANDLEBARS

Pictures are for reference only. Please refer to the actual product.

| ITEM NO. | DESCRIPTION |
|---|---|
| 23-776PS-702 | Handlebar 28.6 T6 AL7075 black for KTM HIGH with polish and sandblast. W:805 H:95 R:68 SPACE:130 S:42 |
| 23-994PS-702 | Handlebar 28.6 T6 AL7075 black with polish and sandblast for KTM. W:805 H:85 R:60 Space:172 S:36 |
| 23-777PS-702 | Handlebar 28.6 T6 AL7075 black for KTM Low with polish and sandblast. W:808 H:83 R:53 SPACE:140 S:41 |

# ROTORS

## 63-726R-240

Brake rotor, OD - 240MM, ID - 58MM

| MAKE | MODEL | YEAR |
|---|---|---|
| YAMAHA | YZ125 | 22 |
| YAMAHA | YZ250 | 22 |
| YAMAHA | YZ250F | 21 |
| YAMAHA | YZ450F | 20 |
| YAMAHA | YZ450FX | 21 |
| FANTIC | XX 250 | 22 |
| FANTIC | XXF 250 | 22 |
| FANTIC | XXF 450M | 22 |

# CABLES

| ITEM NO. | DESCRIPTION | PHOTO |
|---|---|---|
| 263-425 | Front brake cable for KAWASAKI KLX110 10-20 | |
| 267-B2W-B | Clutch cable for YAMAHA YZ250F 21-24, YZ450F 21-23 | |
| 267-BR9-B | Clutch cable for YAMAHA YZ250F 19-20, YZ450F 18-20 | |
| 267-ISM-B | Clutch cable for YAMAHA YZ250F 14-18 | Coming Soon |
| 263-385 | Throttle cable for KAWASAKI KLR650 08-18 | Coming Soon |
| 268-192 | Cable, throttle push-pull set for KTM 300 EXC TPI 22-23 | |

Pictures are for reference only. Please refer to the actual product.

# CLUTCHES

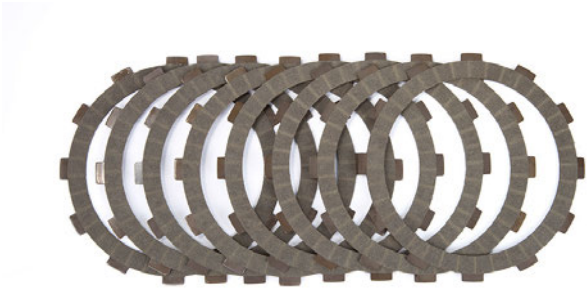

| ITEM NO. | DESCRIPTION |
|---|---|
| 881-F1190-6 | Clutch disc friction paper for HONDA XR250 Y/3(MD30) 00-03 |

Pictures are for reference only. Please refer to the actual product.

# HEAVY DUTY TUBES

Pictures are for reference only.
Please refer to the actual product.

| ITEM NO. | DESCRIPTION |
|---|---|
| 55G-250/275X12-TR6 | 2.0MM Heavy duty tube 250/275X12 TR6 |
| 55G-300/325X17-TR6 | 2.0MM Heavy duty tube 300/325X17 TR6 |
| 55G-300/325X18-TR6 | 2.0MM Heavy duty tube 300/325X18 TR6 |
| 55G-350/400X18-TR6 | 2.0MM Heavy duty tube 350/400X18 TR6 |
| 55G-450/500X18-TR6 | 2.0MM Heavy duty tube 450/500X18 TR6 |

# SPEEDOMETER MAGNETS

## 63800-00107

Speedometer magnet (Orange) fits
KTM, HUSQVARNA, HUSABERG, GASGAS

# SCREWS

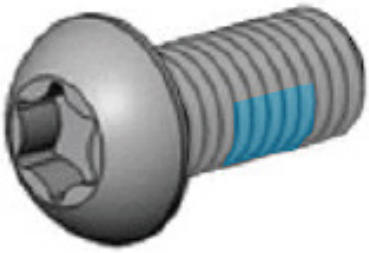

Pictures are for reference only.
Please refer to the actual product.

## 85005-M00614010A

Button head torx screw M6X14MM

## 85005-M00620010A

Button head torx screw M6X20MM

# CHAIN SLIDERS

| ITEM NO. | DESCRIPTION | PHOTO |
|---|---|---|
| 780-28602 | Chain Slider-Below | |
| 990-01802 | Chain Slider-Up | |
| 99K-002 | (780-28602 + 990-01802)<br>Motorcycle chain slider guard and swingarm guide kit for KTM | |

## FITMENT:

| MAKE | MODEL | YEAR |
|---|---|---|
| KTM | 150XC-W | 17-19 |
| KTM | 250EXC-F | 17-19 |
| KTM | 250XC-W | 17-18 |
| KTM | 250XC-W TPI | 19-21 |
| KTM | 300XC-W | 17-18 |
| KTM | 300XC-W TPI | 19-21 |
| KTM | 300XC-W TPI SIXDAYS | 19-20 |
| KTM | 350EXC-F | 17-21 |
| KTM | 450EXC-F SIXDAYS | 19 |
| KTM | 500EXC-F | 17-21 |

# SPROCKET FOR E-BIKE

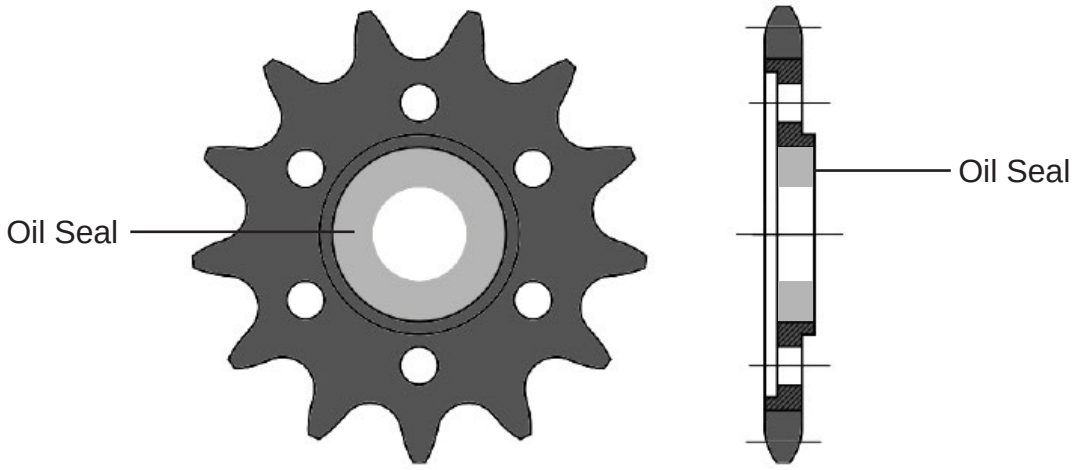


Pictures are for reference only.
Please refer to the actual product.

## 95111-UL0213-Z with Oil seal

Front sprocket 13T black zinc with lighten holes and oil seal.
For Surron ULTRA BEE (Not available in USA)

# OIL SEALS

Pictures are for reference only.
Please refer to the actual product.

| ITEM NO. | DESCRIPTION |
|---|---|
| 190-1016-384 | Oil seal TC 10*16*5 |
| 190-2028-144 | Oil seal TC 20*28*6 |
| 190-2552-0211 | Oil seal set DC 25*52*8 |
| 190-3252-1923 | Oil seal set DB2 32*52*7/9 |
| 190-3252-0011 | Oil seal set DC 32*52*7 |

# SPROCKETS

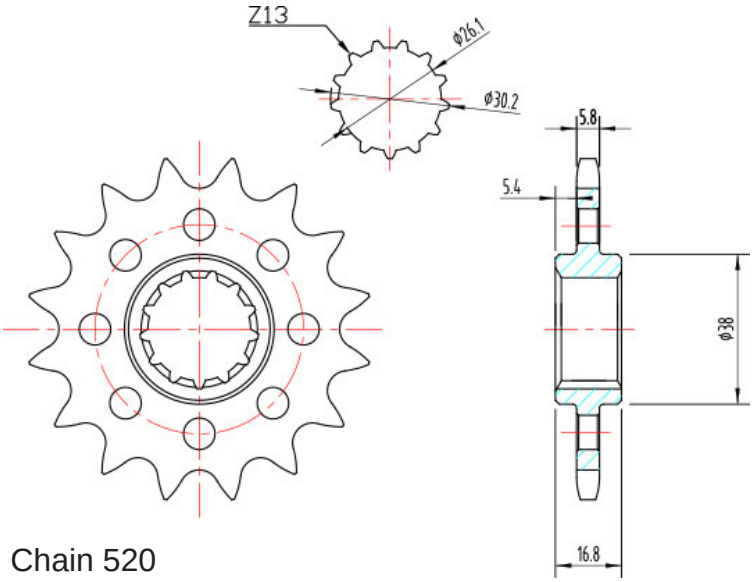


Chain 520

## 95101-MLB16

Front sprocket 16T for
HONDA XL750 Transalp 22-24

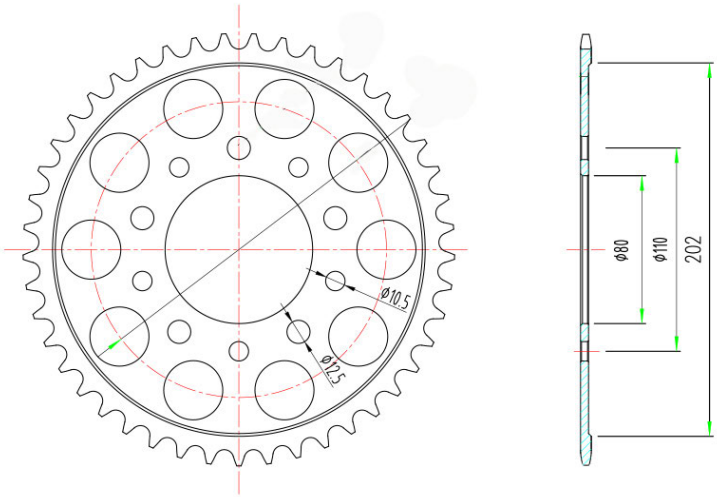


Chain 520

## 95200-201245

Rear sprocket 45T, double hoels
(10.5mm x5, 12.5mm x5)
FITMENT:

| MAKE | MODEL | YEAR |
|---|---|---|
| HONDA | XL750 Transalp | 22-24 |
| TRIUMPH | 865 America (OEM 520 Chain) | 15-17 |
| TRIUMPH | 865 America LT (OEM 520 Chain) | 14-17 |
| TRIUMPH | 865 Speedmaster | 16-17 |

# CABLES

| ITEM NO. | DESCRIPTION | |
|---|---|---|
| 261-MCB-B | Clutch cable for HONDA XL650 TRANSALP 00-07 | |
| 261-MBT-B | Clutch cable for HONDA XL1000 VARADERO 2007 | |
| 261-MEM-B | Clutch cable for HONDA VTX1300 04-09 | |
| 261-MFJ-B | Clutch cable for HONDA CBR600RR 07-08 | |
| 263-024-B | Clutch cable for KAWASAKI ZR750 05-06 | |
| 265-14J-B | Clutch cable for SUZUKI GSX-R600 11-19/21-23, GSX-R750 21-23 | |
| 265-27G-B | Clutch cable for SUZUKI DL650 V-STROM 04-11 | |

**Pictures are for reference only. Please refer to the actual product.

# CABLES

| ITEM NO. | DESCRIPTION | |
|---|---|---|
| 265-37H-B | Clutch cable for SUZUKI GSX-R600 08-09, GSX-R750 08-09 | |
| 265-47H-B | Clutch cable for SUZUKI GSX-R1000 2009 | |
| 267-1B3-B | Clutch cable for YAMAHA FZS600 FAZER 04-09 | |
| 267-2C0-B | Clutch cable for YAMAHA YZF600 R6 06-20, 22-23 | |
| 267-3D8-B | Clutch cable for YAMAHA XVS1300 08-09 | |
| 267-4TR-B | Clutch cable for YAMAHA XVS650 98-00 | |
| 267-54SP-B | Clutch cable for YAMAHA TDM900 03-10 | |

**Pictures are for reference only. Please refer to the actual product.

# CABLES

| ITEM NO. | DESCRIPTION | |
|---|---|---|
| 267-5KS-B | Clutch cable for YAMAHA XVS1100 DRAG STAR 00-11 | |
| 267-5VY-B | Clutch cable for YAMAHA YZF 1000 R1 05-06 | |
| 267-5YK-B | Clutch cable for YAMAHA MT-03 660 06-09, 11-12 | |
| 267-B04-B | Clutch cable for YAMAHA MTN320 MT-03 16-18 | |
| 267-2A6-C1 | Front cable for YAMAHA MX100 79-83 | |

**Pictures are for reference only. Please refer to the actual product.

# INDICATORS

| ITEM NO. | DESCRIPTION |
|---|---|
| 605-10240-RL | Rear left indicator for SUZUKI DL650/1000 , amber lens |
| 605-10240-RR | Rear right indicator for SUZUKI DL650/1000 , amber lens |
| 60D-07200E-FL | Front left indicator for DUCATI MONSTER 695 620 S2R ETC, with E-MARK |
| 60D-07200E-FR | Front right indicator for DUCATI MONSTER 695 620 S2R ETC, with E-MARK |
| 60D-07200E-RL | Rear left indicator for DUCATI MONSTER 695 620 S2R ETC, with E-MARK |
| 60D-07200E-RR | Rear right indicator for DUCATI MONSTER 695 620 S2R ETC, with E-MARK |
| 60D-07200-FL | Front left indicator for DUCATI MONSTER 695 620 S2R ETC, without E-MARK |
| 60D-07200-FR | Front right indicator for DUCATI MONSTER 695 620 S2R ETC, without E-MARK |
| 60D-07200-RL | Rear left indicator for DUCATI MONSTER 695 620 S2R ETC, without E-MARK |
| 60D-07200-RR | Rear right indicator for DUCATI MONSTER 695 620 S2R ETC, without E-MARK |

60D-10240-RL

60D-07200 Series

# SPROCKET KITS

| MAKE | MODEL | YEAR | KIT NO. | NOTE |
|---|---|---|---|---|
| HONDA | CG150 TITAN | 04-16 | 95870-TT01 | Front and rear sprocket.<br>-Front sprocket 15T<br>-Rear sprocket 44T<br>-428H Chain with 118 links |
| HONDA | CG150 FAN | 09-15 | | |
| HONDA | CG150 START | 14-16 | | |
| HONDA | CG150 CARGO | 13-15 | | |
| HONDA | CG160 CARGO | 16-23 | | |
| HONDA | CG160 FAN | 16-23 | | |
| HONDA | CG160 TITAN | 16-23 | | |
| HONDA | CG160 START | 16-23 | | |

# CLUTCH PLATES

| ITEM NO. | DESCRIPTION |
|---|---|
| 881-F1218-8 | Clutch disc friction paper for HONDA CB600 F7/F8/F9/FA HORNET 07-11 ; SUZUKI GSF 650 K7-K9/L0 NAKED BANDIT NON ABS 07-11 |
| 881-F1319-8 | Clutch disc friction paper for HONDA CRF 1000L |
| 881-F1323-7 | Clutch disc friction paper for HONDA CB500/CBR500 |
| 883-F4503-9 | Clutch disc friction paper for KAWASAKI Z750 (ZR L7F/L8F/L9F/LAF) 07-10 |
| 883-F4510-10 | Clutch disc friction paper for KAWASAKI Z1000(ZR1000 DAF/DBF) 10-11 |
| 885-F3417-10 | Clutch disc friction paper for SUZUKI GSXR 750 K4/K5 04-05, GSF 1200 T/ST/V/SV/W/SW/X/SX/Y/SY/K1-K5/SK1-SK5 BANDIT 96-05 |
| 885-F3457-7 | Clutch disc friction paper for SUZUKI VZR 1800 RTK8/RTK9/R2L1 (M109R2) 08-12 |
| 886-F7009-8 | Clutch disc for HARLEY |
| 886-F7013-8 | Clutch disc for HARLEY |
| 886-D7014-7 | Clutch disc for HARLEY |
| 886-F7008-9 | Clutch disc friction paper for HARLEY |
| 886-F7009-8 | Clutch disc friction paper for HARLEY |
| 888-D5669-8 | Clutch disc for KTM 790 DUKE |
| 888-F5642-8 | Clutch disc friction paper for KTM DUKE 690 08-11 |
| 888-F5665-8 | Clutch disc friction paper for KTM EXC-F450 13-18 |
| 888-F5669-8 | Clutch disc friction paper for KTM 790 DUKE |
| 888-F5683-10 | Clutch disc friction paper for KTM |
| 88B-F5660-9 | Clutch disc friction paper for BMW |
| 88B-D5682-8 | Clutch disc for BMW |
| 88B-F5685-9 | Clutch disc friction paper for BMW |
| 88-C306P | Paper clutch set for HONDA CRF 1000L |
| 885-D2203-5 | Clutch disc for SUZUKI |
| 88-C295 | Cork clutch set for YAMAHA |
| 88-C313PK | Clutch set with spring friction paper for YAMAHA |

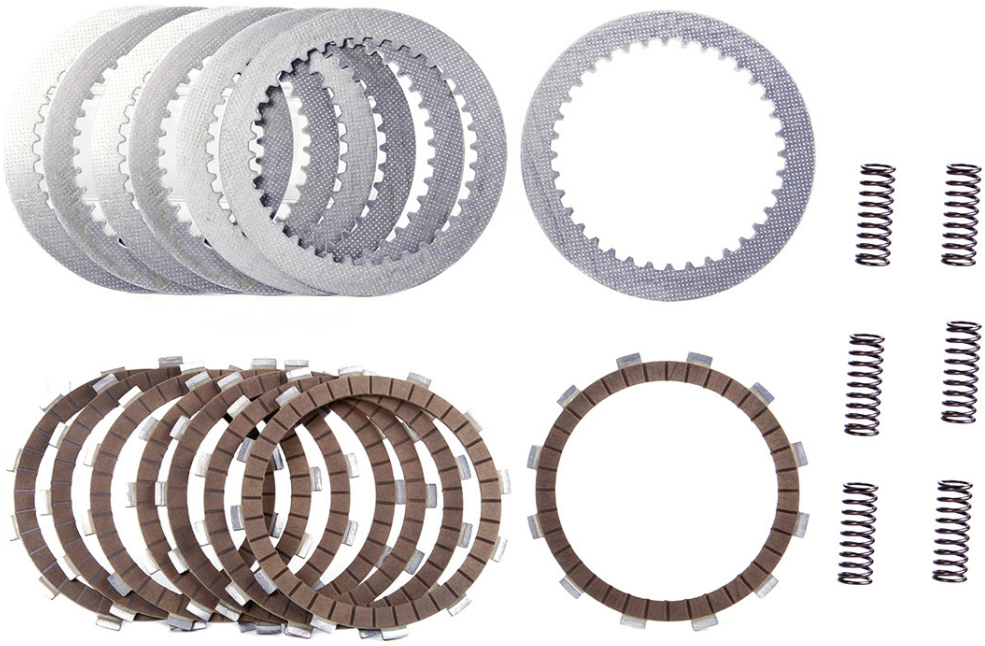

**Pictures are for reference only. Please refer to the actual product.

# GASKETS

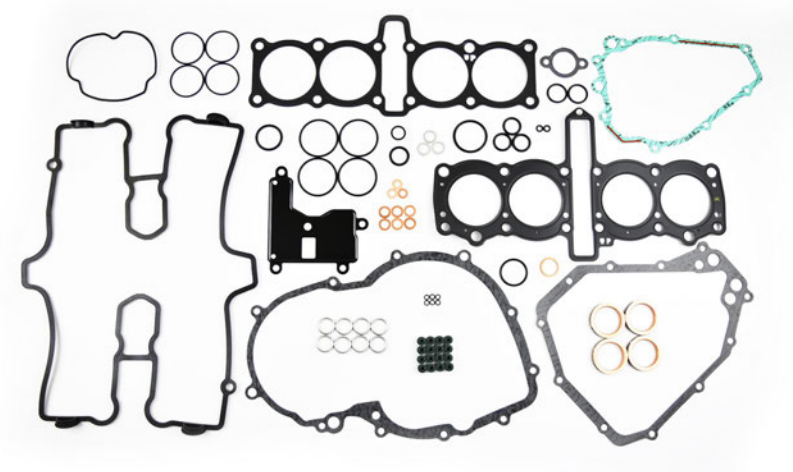

## 19-P54031

Complete set gasket for
SUZUKI GSF400 BANDIT 91-93

## 19-P54033

Top set gasket for
SUZUKI GSF400 BANDIT 91-93

# BULBS

## 48-16101

Bulb 12V 23W BA9S clear

# CLUTCH PLATES / SETS

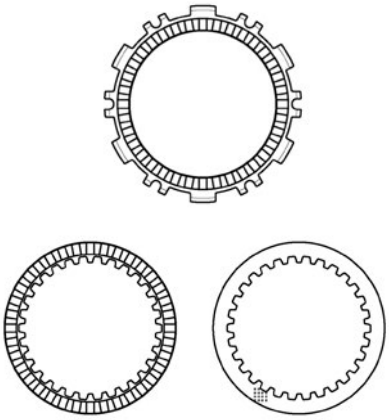

88-CS284

| ITEM NO. | DESCRIPTION |
|---|---|
| 881-D1307-4 | Clutch disc for HONDA ANF 125 3/5/ T5/6/7/9 INNOVA 03-09 |
| 887-D2378-7 | Clutch disc for YAMAHA XP500(T-MAX SCOOTER ALL MODELS) 01-11 |
| 887-D2382-8 | Clutch disc for YAMAHA T-MAX 530 11 |
| 88P-F5679-4 | Clutch disc friction paper for VESPA |
| 88-CS284 | Cork clutch set for scooter YAMAHA T-MAX 530 11 |
| 88-CS284P | Paper clutch set for scooter YAMAHA T-MAX 530 11 |

*Pictures are for reference only. Please refer to the actual product.

# TYRES

## 55U-90/90X12-18B

Scooter tyre 90/90X12 TL 4PR

| SIZE | Unloaded Dimension | | MAX. LOAD(KG) | Max. Infl. Pressure (PSI) | Rim Width (Inch) |
|---|---|---|---|---|---|
| | SW (mm) | OD (mm) | | | |
| 90/90-12 | 90 | 467 | 212 | 36 | 2.15 |

# GASKETS

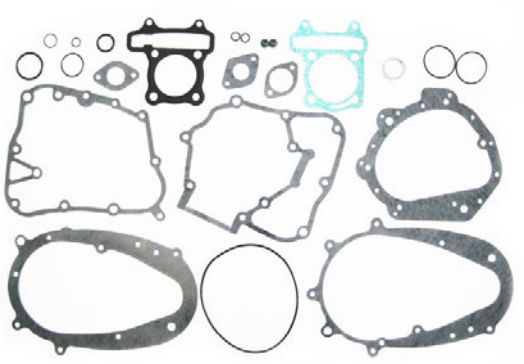

## 19-Z9691

Complete set gasket
for KYMCO AGILITY 125

# CLUTCH PLATES

| ITEM NO. | DESCRIPTION |
|---|---|
| 881-F1190-6 | Clutch disc friction paper for HONDA TRX300 X9 09 |

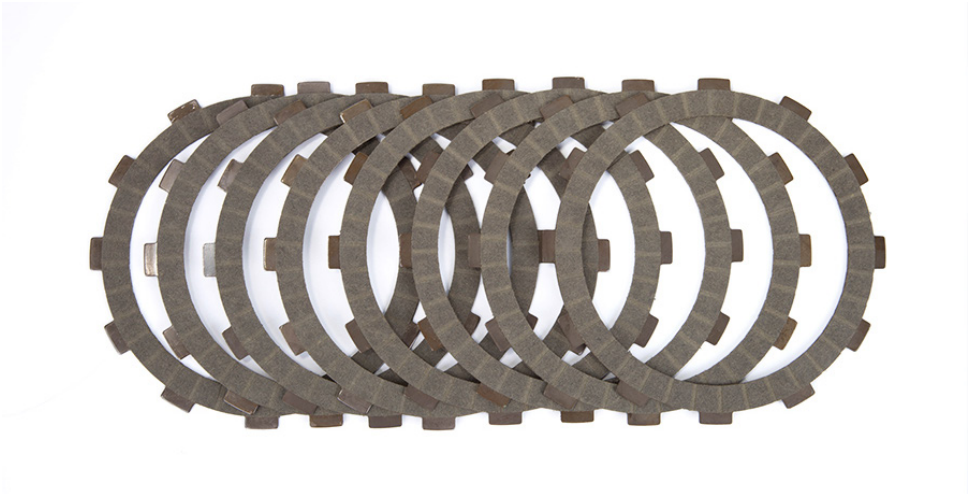

Pictures are for reference only.
Please refer to the actual product.

# KEY RINGS / COASTERS

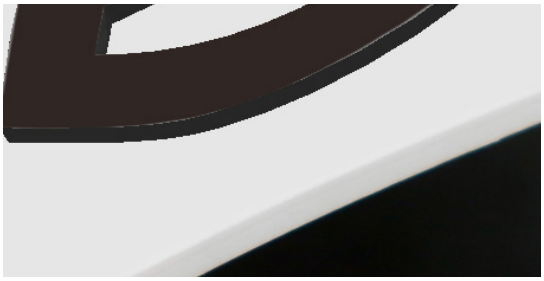

## 00-88200

10*10 CM Rubber coaster.

## Craft Your Brand Image with Custom Rubber Coasters!

*Pictures are for reference only.
Please refer to the actual product.

## Personalize Your Brand with Custom Keychains!

## 00-15710

Rubber key ring.

## 00-15810

Leather key ring.

*Pictures are for reference only. Please refer to the actual product.

# WRENCH SOCKET SET

## 84-018324

1" Cambuckle tie down with soft end and S hook*2PCS. With coating black/red

# MOTRIX

MOTORCYCLE PARTS AND ACCESSORIES

FACEBOOK

WEBSITE

TAIWANTRADE

# CON ROD KITS

| ITEM NO. | DESCRIPTION |
|---|---|
| 011-0055 | Con rod kit for HONDA CRF125/150 07-23 |
| 013-0028 | Con rod kit for KAWASAKI KX250F 10-16 |
| 013-0029 | Con rod kit for KAWASAKI KX450F 19-23 |
| 015-0059 | Con rod kit for SUZUKI RMZ450 08-12 |
| 018-0015 | Con rod kit for KTM SX125 17-19 |
| 018-0016 | Con rod kit for KTM SX65 09-23 |

Pictures are for reference only.
Please refer to the actual product.

# COUNTER SHAFT SEAL KITS

95199-E002

040-2026113

190-2638-38C4

## 15-HA4024

Counter shaft seal kit for YAMAHA
YZ65 18-23,
YZ85 02-23,
YZ85LW 22-23,
YZ125 87-04

**Contents:**

1. **040-2026113: Bushing sprocket spacer*1.**
2. **95199-E002: Drive sprocket tab washer*1.**
3. **190-2638-38C4: Oil seal*1.**

# X-RING CHAINS

- X-ring
- Solid bush
- Fine alloy material
- Special-treatment on Pin
- High quality grease
- Whole new processing technology

| Chain No. | Pitch (mm) | Width between Inner Plates | Pin Dia | Pin Length | Roller Dia | Plate Thickness Inner | Plate Thickness Outer | Tensile Strength (min) | Tensile Strength (Average) | Connecting Link (Standard) | Connecting Link (Optional) | Application By CC |
|---|---|---|---|---|---|---|---|---|---|---|---|---|
| 87C-520HX | 15.875 | 6.35 | 5.24 | 22 | 10.16 | 2.42 | 2.42 | 33 | 35.2 | PL | EPL | 170-300 |
| 87C-520X | 15.875 | 6.35 | 5.24 | 20.15 | 10.16 | 2 | 2 | 26.5 | 30.2 | PL | EPL | 160-250 |
| 87C-525HX | 15.875 | 7.85 | 5.24 | 23.5 | 10.16 | 2.42 | 2.42 | 33 | 35.3 | PL | EPL | 170-350 |
| 87C-525X | 15.875 | 7.85 | 5.24 | 21.82 | 10.16 | 2 | 2 | 26.5 | 30.4 | PL | EPL | 170-300 |

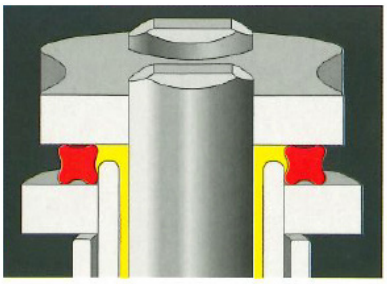

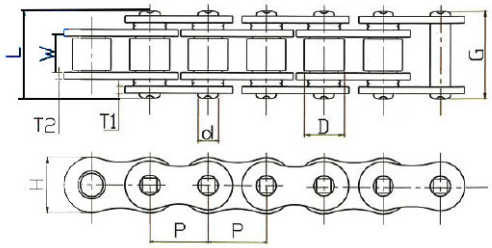


| Model No. | Pitch | Roller Link Width (Min) | Roller Dia. (Max) | Pin Link Plate Thickness | Inner Link Plate Thickness | Inner Link Plate Height | Pin Dia. | Overall Width Riv. | Overall Width Con. | Minimum Tensile Strength | Average Tensile Strength | Displacement Application (Max) |
|---|---|---|---|---|---|---|---|---|---|---|---|---|
| | P | W | D | T1 | T2 | H | d | L | G | / | / | cc |
| Unit | mm | mm | mm | mm | mm | mm | mm | mm | mm | kgf | kgf | cc |
| 87K-525EX | 15.875 | 7.85 | 10.16 | 2.2 | 2.2 | 14.7 | 5.25 | 22.55 | 22.85 | 3900 | 4200 | 900 |
| 87K-520EX | 15.875 | 6.25 | 10.16 | 2.2 | 2.2 | 14.7 | 5.25 | 21.15 | 20.6 | 3600 | 3800 | 600 |

# DUAL METAL SPROCKETS

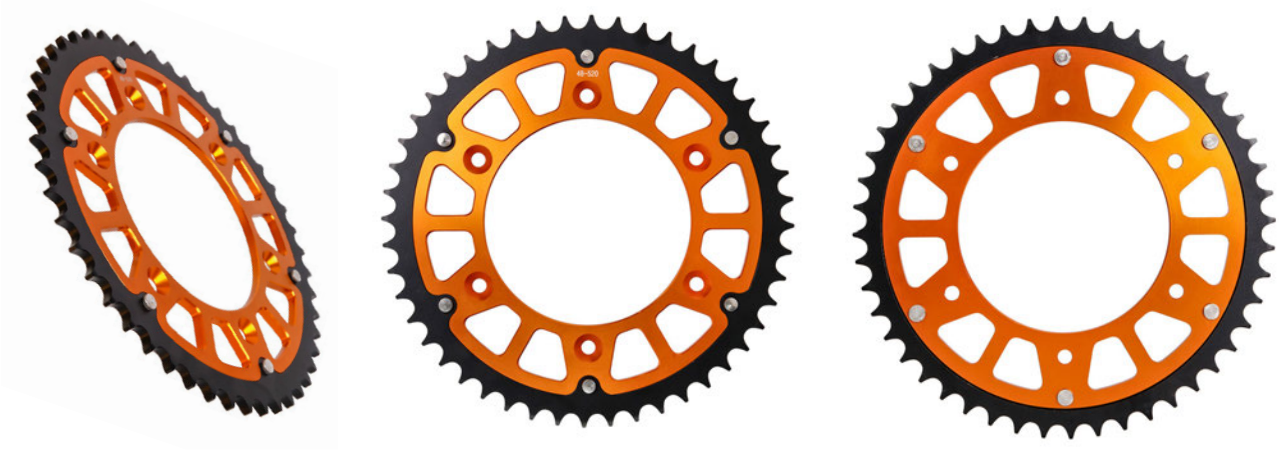

## 95228-021048-0702

Dual metal rear sprocket 48T, orange aluminum with black steel, S45C STEEL. AL7075 with T6 heat-treatment aluminum

Fitment:

| MAKE | MODEL | YEAR |
|---|---|---|
| BETA | 300 RR 2T | 20-21 |
| BETA | 300 RR-S | 18-21 |
| BETA | 390 RR-S | 18-20 |
| BETA | 430 RR | 15-19 |
| BETA | 430 RR-S | 18-21 |
| BETA | 430 RS | 15-16 |
| BETA | 450 RR | 13-14 |
| BETA | 480 RR | 15-19 |
| BETA | 498 RR | 13-16 |
| HONDA | CRF150 F-3,4,5 | 03-05 |
| HONDA | CR250 R-3 | 03 |
| HONDA | CRF250 R-K,L,M | 19-21 |
| HONDA | CRF250 RX-K,L,M | 19-21 |
| HONDA | CRF250 R-A USA | 10 |
| HONDA | XR250 RT,RV,RW,RX,RY,R-1,R-2,R-3,R-4 | 96-04 |
| HONDA | CRF450 R-4,5,6,7,8,9,A,B,C,D,E | 04-14 |
| HONDA | CRF450 R-F,G,H,J,K,L | 15-18 |
| HONDA | CRF450 R-L | 20 |
| HONDA | CRF450 RX-H,J,K,L,M | 17-21 |
| HONDA | XR650 R-Y,1,2,3,4.5,6,7 | 00-07 |

*Not available in USA

# SPROCKETS FOR E-BIKE

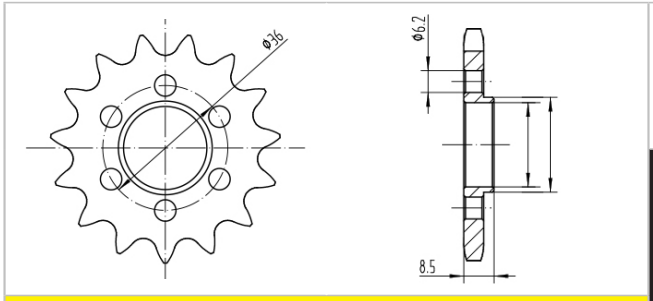


95111-LT02**-Z

Front Sprocket, Chain: 420
Black Zinc

**FOR SURRON LIGHT BEE**

95111-ST02**-Z

Front Sprocket, Chain: 520
Black Zinc

**FOR SURRON STORM BEE**

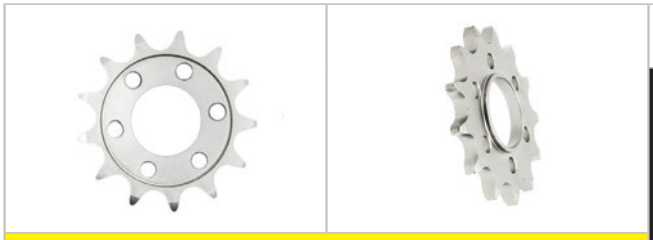

95111-UL02**

Front Sprocket

**FOR SURRON ULTRA BEE**

**= Teeth / Feel free to ask your sales for further information.

# BELT DRIVE SPROCKETS

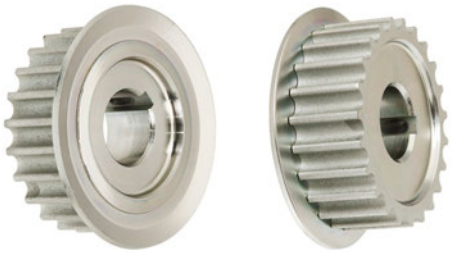

## 95150-ES0123

Belt drive front sprocket 23T for E-bike Sur-ron

## 95250-ES0151

Belt drive rear sprocket 51T for E-bike Sur-ron

# BELTS

## 02-560*8MX16

EPDM High torque timing belt.
Tooth pitch: GP8M / 8MM.
Number of teeth: 70. Width: 16mm

# CABLE ACCESSORIES

## 26X-008A

Cable adjuster gold 9MMX1.25P

Pictures are for reference only.
Please refer to the actual product.

# SWITCHES

## 467-00038

Mapping fuel mode launch control switch for
YAMAHA YZ250F, YZ450F, YZ250FX, YZ450FX

# IGNITION COILS

## 487-1C8ES

Ignition coil assembly for YAMAHA

| MAKE | MODEL | YEAR |
|---|---|---|
| YAMAHA | WR250R | 08-20 |
| YAMAHA | WR250X | 08-11 |

# FOOTPEGS

548-202**S

548-202**U

548-202**X

**=Color NO. : 02-Black / 03-Blue / 04-Red / 07-Orange / 08-Green / 10-Silver / 11-Gold / 37-Taitanium UV

| MAKE | MODEL | YEAR | ITEM NO. |
|---|---|---|---|
| GASGAS | MC 85 | 21-23 | 548-202**X |
| GASGAS | MC 125 | 21-23 | 548-202**X |
| GASGAS | EC 250 | 21-23 | 548-202**X |
| GASGAS | EC 250F | 21-23 | 548-202**X |
| GASGAS | EX 250 | 22-23 | 548-202**X |
| GASGAS | EX 250F | 21-23 | 548-202**X |
| GASGAS | MC 250 | 22-23 | 548-202**X |
| GASGAS | MC 250F | 21-23 | 548-202**X |
| GASGAS | EC 300 | 21-23 | 548-202**X |
| GASGAS | EX 300 | 21-23 | 548-202**X |
| GASGAS | EC 350F | 21-23 | 548-202**X |
| GASGAS | EX 350F | 21-23 | 548-202**X |
| GASGAS | MC 350F | 22-23 | 548-202**X |
| GASGAS | EX 450F | 21-23 | 548-202**X |
| GASGAS | MC 450F | 21-23 | 548-202**X |
| HUSQVARNA | TC 85 | 18-22 | 548-202**X |
| HUSQVARNA | TC 85 | 18-20 | 548-202**S |
| HUSQVARNA | TC 85 | 18-20 | 548-202**U |
| HUSQVARNA | TC 125 | 16-22 | 548-202**X |
| HUSQVARNA | TC 125 | 16-20 | 548-202**S |
| HUSQVARNA | TC 125 | 16-20 | 548-202**U |
| HUSQVARNA | TX 125 | 17-19 | 548-202**X |
| HUSQVARNA | TX 125 | 17-19 | 548-202**S |
| HUSQVARNA | TX 125 | 17-19 | 548-202**U |
| HUSQVARNA | TE 150 | 17-19 | 548-202**X |
| HUSQVARNA | TE 150 | 23 | 548-202**X |
| HUSQVARNA | TE 150 | 17-19 | 548-202**S |
| HUSQVARNA | TE 150 | 17-19 | 548-202**U |
| HUSQVARNA | TE 150i | 20-22 | 548-202**X |
| HUSQVARNA | TE 150i | 20 | 548-202**S |
| HUSQVARNA | TE 150i | 20 | 548-202**U |
| HUSQVARNA | FC 250 | 16-22 | 548-202**X |
| HUSQVARNA | FE 250 | 17-23 | 548-202**X |
| HUSQVARNA | TC 250 | 17-22 | 548-202**X |
| HUSQVARNA | TC 250 | 17-20 | 548-202**S |
| HUSQVARNA | TC 250 | 17-20 | 548-202**U |

| MAKE | MODEL | YEAR | ITEM NO. |
|---|---|---|---|
| HUSQVARNA | TE 250 | 17-18 | 548-202**X |
| HUSQVARNA | TE 250 | 23 | 548-202**X |
| HUSQVARNA | TE 250i | 18-22 | 548-202**X |
| HUSQVARNA | TE 250-300 | 17-18 | 548-202**S |
| HUSQVARNA | TE 250-300 | 17-18 | 548-202**U |
| HUSQVARNA | TE 250i-300i | 18-20 | 548-202**S |
| HUSQVARNA | TE 250i-300i | 18-20 | 548-202**U |
| HUSQVARNA | TE 300 | 17-18 | 548-202**X |
| HUSQVARNA | TE 300 | 23 | 548-202**X |
| HUSQVARNA | TE 300i | 18-22 | 548-202**X |
| HUSQVARNA | TX 300 | 17-19 | 548-202**X |
| HUSQVARNA | TX 300 | 17-19 | 548-202**S |
| HUSQVARNA | TX 300 | 17-19 | 548-202**U |
| HUSQVARNA | TX 300i | 20-22 | 548-202**X |
| HUSQVARNA | TX 300i | 20 | 548-202**S |
| HUSQVARNA | TX 300i | 20 | 548-202**U |
| HUSQVARNA | FC 350 | 16-22 | 548-202**X |
| HUSQVARNA | FE 350 | 17-23 | 548-202**X |
| HUSQVARNA | FX 350 | 17-22 | 548-202**X |
| HUSQVARNA | FX 350 | 17-20 | 548-202**S |
| HUSQVARNA | FX 350 | 17-20 | 548-202**U |
| HUSQVARNA | FC 450 | 16-22 | 548-202**X |
| HUSQVARNA | FE 450 | 17-23 | 548-202**X |
| HUSQVARNA | FX 450 | 17-22 | 548-202**X |
| HUSQVARNA | FX 450 | 17-20 | 548-202**S |
| HUSQVARNA | FX 450 | 17-20 | 548-202**U |
| HUSQVARNA | FE 250-501 | 17-20 | 548-202**S |
| HUSQVARNA | FE 250-501 | 17-20 | 548-202**U |
| HUSQVARNA | FE 501 | 17-23 | 548-202**X |
| KTM | 85 SX | 18-23 | 548-202**X |
| KTM | 125 SX | 16-22 | 548-202**X |
| KTM | 125 SX | 16-20 | 548-202**S |
| KTM | 125 SX | 16-20 | 548-202**U |
| KTM | 125 XC-W | 17-19 | 548-202**X |
| KTM | 125-150 XC-W | 17-19 | 548-202**S |
| KTM | 125-150 XC-W | 17-19 | 548-202**U |

# FOOTPEGS

548-202**S

548-202**U

548-202**X

**=Color NO. : 02-Black / 03-Blue / 04-Red / 07-Orange / 08-Green / 10-Silver / 11-Gold / 37-Taitanium UV

| MAKE | MODEL | YEAR | ITEM NO. |
|---|---|---|---|
| KTM | 150 EXC | 23 | 548-202**X |
| KTM | 150 EXC TPI | 20-22 | 548-202**X |
| KTM | 150 EXC TPI | 20 | 548-202**S |
| KTM | 150 EXC TPI | 20 | 548-202**U |
| KTM | 150 SX | 16-22 | 548-202**X |
| KTM | 150 SX | 16-20 | 548-202**S |
| KTM | 150 SX | 16-20 | 548-202**U |
| KTM | 150 XC-W | 17-19 | 548-202**X |
| KTM | 250 EXC | 17-18 | 548-202**X |
| KTM | 250 EXC | 23 | 548-202**X |
| KTM | 250 EXC TPI | 18-22 | 548-202**X |
| KTM | 250 SX | 17-22 | 548-202**X |
| KTM | 250 SX | 17-20 | 548-202**S |
| KTM | 250 SX | 17-20 | 548-202**U |
| KTM | 250 SX-F | 16-22 | 548-202**X |
| KTM | 250 XC-F | 16-22 | 548-202**X |
| KTM | 250-300 EXC | 17-18 | 548-202**S |
| KTM | 250-300 EXC | 17-18 | 548-202**U |
| KTM | 250-300 EXC TPI | 18-20 | 548-202**S |
| KTM | 250-300 EXC TPI | 18-20 | 548-202**U |
| KTM | 300 EXC | 17-18 | 548-202**X |
| KTM | 300 EXC | 23 | 548-202**X |
| KTM | 300 EXC TPI | 18-22 | 548-202**X |
| KTM | 350 EXC-F | 17-22 | 548-202**X |
| KTM | 350 SX-F | 16-22 | 548-202**X |
| KTM | 350 XC-F | 16-22 | 548-202**X |
| KTM | 250-450 SX-F | 16-20 | 548-202**S |
| KTM | 250-450 SX-F | 16-20 | 548-202**U |
| KTM | 250-450 XC-F | 16-20 | 548-202**S |
| KTM | 250-450 XC-F | 16-20 | 548-202**U |
| KTM | 450 EXC-F | 17-22 | 548-202**X |
| KTM | 450 SX-F | 16-22 | 548-202**X |
| KTM | 450 XC-F | 16-22 | 548-202**X |
| KTM | 250-500 EXC-F | 17-20 | 548-202**S |
| KTM | 250-500 EXC-F | 17-20 | 548-202**U |

# TYRE VALVES

## 55V-00410

Aluminum tyre valve silver L1/29.8MM, L2/52.8MM, rim hole: 11.5 (0.453")

## 55V-00510

Aluminum tyre valve silver L1/19.5MM, L2/42.5MM, rim hole: 11.5 (0.453")

# CABLES

| ITEM NO. | DESCRIPTION |
|---|---|
| 263-425 | Front brake cable for KAWASAKI KLX110 2019 |
| 261-KYK-C1 | Front brake cable for HONDA CRF110, 2013-2018 |
| 261-KYK-A | Throttle cable for HONDA CRF110, 2019-2023 |

# CABLES

| ITEM NO. | DESCRIPTION | |
|---|---|---|
| 263-090-B | Clutch cable for KAWASAKI Z750 10 | |
| 263-424-B | Clutch cable for KAWASAKI Z750 07 | |
| 263-553-B | Clutch cable for KAWASAKI Z750 12 | |
| 263-564-B | Clutch cable for KAWASAKI ZX6-R NINJA 03 | |
| 263-599-B | Clutch cable for KAWASAKI Z800 15-16 | |
| 263-603-B | Clutch cable for KAWASAKI KLE650 VERSYS 16 | |
| 263-622-B | Clutch cable for KAWASAKI KLE300 VERSYS 19 | |
| 263-625-B | Clutch cable for KAWASAKI Z1000 22-23 | |
| 263-645-B | Clutch cable for KAWASAKI Z800 23 | Coming Soon |

**Pictures are for reference only. Please refer to the actual product.

# GASKETS

| ITEM NO. | DESCRIPTION |
|---|---|
| 19-H0691 | Complete set gasket for HONDA VT500 83-85 |

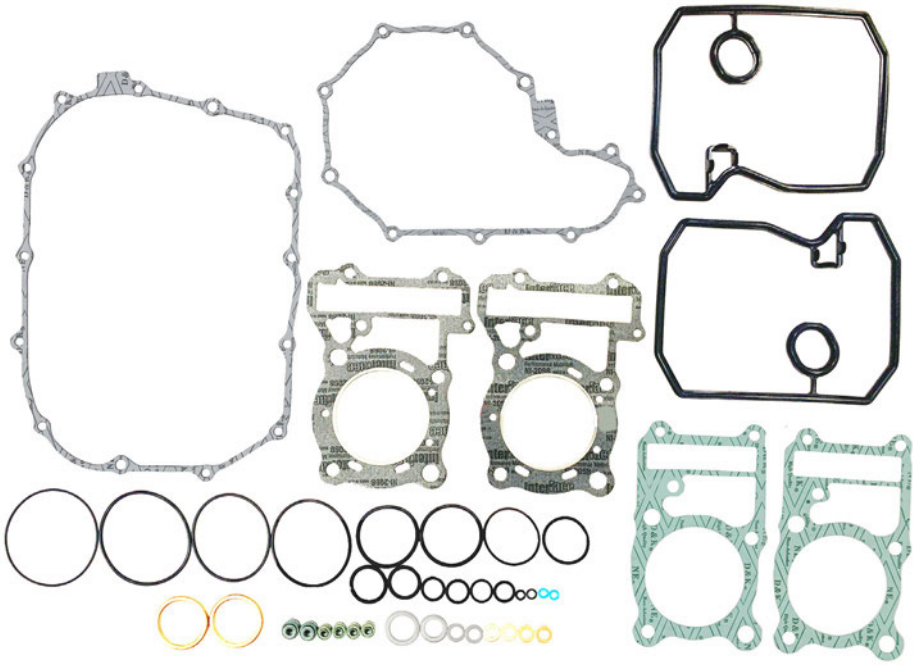

# CON ROD KITS

| ITEM NO. | DESCRIPTION |
|---|---|
| 017-1B9 | Con rod kit for YAMAHA YP125 X-MAX 2009 |
| 017-5VK | Con rod kit for YAMAHA XT660X |

Pictures are for reference only.
Please refer to the actual product.

# BRAKE SHOES

| ITEM NO. | DESCRIPTION | PICTURE |
|---|---|---|
| 92-SB843G | Brake shoes for PUCH50/100 | |
| DE-10061 | Brake shoes for SIMSON50/51 | |

# SPROCKETS

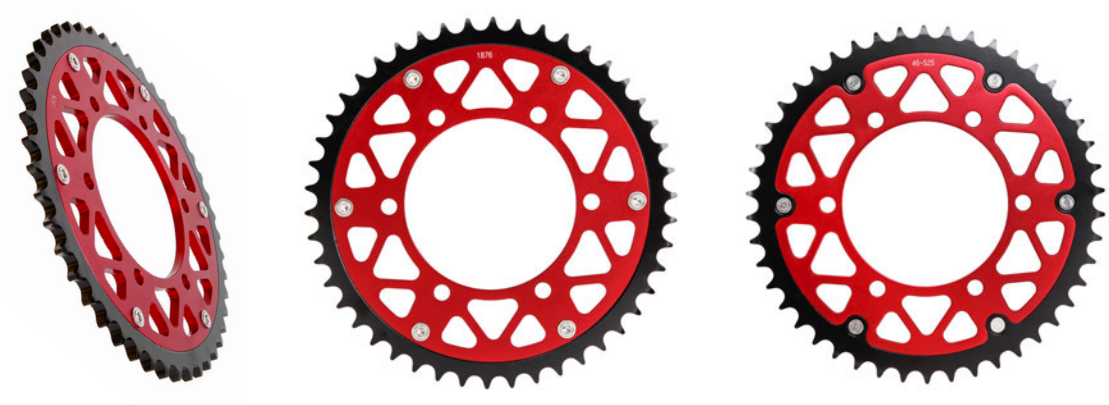

## 95227-187646-0402

Dual metal rear sprocket 43T, red aluminum with black steel, S45C STEEL.
AL7075 with T6 heat-treatment aluminum

Fitment:

| | | |
|---|---|---|
| HONDA | Tenere 700 ABS (XTZ690 / XTZ7MB) | 20-21 |
| HONDA | Tenere 700 ABS (XTZ690 / XTZ7NB) | 22 |
| HONDA | Tenere 700 Rally Edition ABS (XTZ690SP) | 20-21 |
| HONDA | Tenere 700 Rally Edition ABS (XTZ690SP) | 22 |
| HONDA | Tenere 700 World Raid (XTZ690D) | 22 |

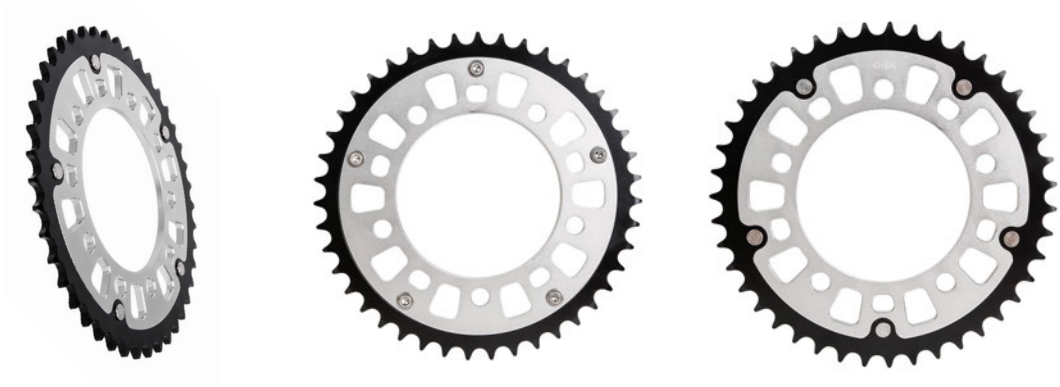

## 95229-131643-1002

Dual metal rear sprocket 43T, silver aluminum with black steel, S45C STEEL.
AL7075 with T6 heat-treatment aluminum
Fitment:

| | | |
|---|---|---|
| HONDA | CT700 USA | 14-16 |
| HONDA | CT700 N USA | 14-16 |
| HONDA | CTX700 N DCT USA | 14-18 |
| HONDA | NC700 S/SA-C,D | 12-13 |
| HONDA | NC700 X/XA-C,D | 12-13 |
| HONDA | NC700 X/XA-E,F USA | 14-15 |

| | | |
|---|---|---|
| HONDA | NC750 S/SA-E,F,G,H,J (ABS) | 14-18 |
| HONDA | NC750 S/SA-K,L (ABS) | 19-20 |
| HONDA | NC750 X/XA-E,F,G,H | 14-17 |
| HONDA | NC750 XA-J,K,L (ABS) | 18-20 |
| HONDA | NC750 XA-M,N (ABS) | 21-22 |
| HONDA | NC750 XA-P (ABS) | 23 |

# PEUGEOT KISBEE 50/100 PLASTIC PARTS

| | | |
|---|---|---|
| | | |
| **79E-20003502** | **79E-20003602** | **79E-20003701** |
| Front cover for PEUGEOT KISBEE 50/100 CC | Front fender for PEUGEOT KISBEE 50/100 CC | Front protector cover for PEUGEOT KISBEE 50/100 CC |
| | | |
| **79E-20007801** | **79E-20007901** | **79E-20009101** |
| Side cover left for PEUGEOT KISBEE 50/100 CC | Side cover right for PEUGEOT KISBEE 50/100 CC | Upper handle cover for PEUGEOT KISBEE 50/100 CC |

# CON ROD KITS

| ITEM NO. | DESCRIPTION |
|---|---|
| 011-KWN | Con rod kit for HONDA SH125 PCX125 |
| 011-KZY | Con rod kit for HONDA SH125 01-12 small end 14MM |
| 017-2DS | Con rod kit for YAMAHA GDP125 N-MAX 2017 |

Pictures are for reference only.
Please refer to the actual product.

# PISTON RING KITS

| ITEM NO. | DESCRIPTION | PICTURE |
|---|---|---|
| 18KR-KHE7-STD | Piston ring kit for KYMCO GRAND DINK 250, XCITING250, MXU 300. Standard size cylinder, diameter: 72.70MM | 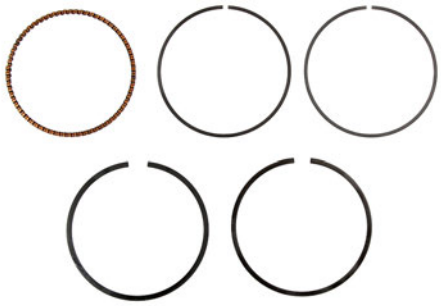 |
| 18KR-KHE7-025 | Piston ring kit for KYMCO GRAND DINK 250, XCITING250, MXU 300. Standard size cylinder, diameter: 72.70MM+0.25MM | |

# SHOCK ABSORBERS

## 171-FHR60202

2 Front gas shocks fits HONDA For many 2014-2019 RANCHER, FOREMAN & RUBICON

## 171-RHR60202

2 Rear gas shocks for HONDA most 2015-2019 RANCHER 420, RUBICON & FOREMAN 500 WITH 1RS

## 172-F5320202

Front shock absorber heavy duty gas strut For POLARIS RANGER 400 10-14, RANGER 500 11-13, RANGER 570 14, RANGER 800 13-14

## 172-F7620202

Front gas shock for Polaris fits 1999-2017 ATV & UTV

# CABLES

## 261-A4010

Brake cable for HONDA TRX300 FOURTRAX 1996-2000, TRX300FW FOURTRAX 4*4 1996-2000

## 265-31G-C

Brake cable for SUZUKI KING QUAD500 LTA500 20', KING QUAD700 LTA700X 07', KING QUAD750 LTA750X 19', QUAD450 LTA450X 08'

# GASKETS

| ITEM NO. | DESCRIPTION |
|---|---|
| 19-BA0011 | Complete set gaket for CAN-AM BRP800 |

# CON ROD KITS

| ITEM NO. | DESCRIPTION |
|---|---|
| 01K-LDE9 | Con rod kit for KYMCO 300 MXU |

Pictures are for reference only.
Please refer to the actual product.

# WRENCH SOCKET SET

## **NEW**

## 84-09409

Wrench socket set
Size: 23.5x12.5*4cm
Net weight: 1.2KG

| Contents (45PCS): | | |
|---|---|---|
| 1. | Bit sockets*21<br>(PH1, 2, 3; SL4, 5.5, 7; PZ1, 2, 3;<br>HEX3, 4, 5, 6, 7, 8; T10, 15, 20, 25, 30, 40) | 21 PCS |
| 2. | Hexagon key (1.5 / 2 / 2.5)mm | 3 PCS |
| 3. | 1/4" Extension bar 50mm | 1 PC |
| 4. | 1/4" Extension bar 100mm | 1 PC |
| 5. | 1/4" Sliding T bar 110mm | 1 PC |
| 6. | 1/4" Flexible socket enxtension bar | 1 PC |
| 7. | 1/4" ratchet wrench | 1 PC |
| 8. | Spinner handle | 1 PC |
| 9. | Adapter | 1 PC |
| 10. | 1/4" Universal joint | 1 PC |
| 11. | 1/4" Drive sockets<br>(4/4.5/5/5.5/6/7/8/9/10/11/12/13/14)mm | 13 PCS |

# WRENCH SOCKET SET

## 84-11402

Mini torque wrench set-mat finished. 1/4" DR. 64T, torque wrench 50~250 IN-LB, L248MM, mat finished.
Included 1/4" HEX 3,4,5,6,8,10&T25 (L:37MM) CR-V socket

## 84-11411

Aluminum mini torque wrench - anodized with matt finished. 1/4" DR. 72T, torque wrench 3~16 N.M, L:173MM, G:210G

## 84-11421

Industrial torque wrench (LA series)-matt finished. 3/8" DR. 32T, torque wrench 20~100 FT-LB/33.9~128.8N.M, L: 433MM.

# PULL START ROPE

## 84-17152

Nylon pull start rope black color
5mm x 1.75m (5PCS/BAG)

# TIRE VALVE STEM CORE REMOVER

## 84-37504

Tire valve stem core remover